Rev	AWO #	Description	Date	Appr
-	7155	RELEASED	10/09/06	
A		REDRAWN	11/25/11	

APPROVED: _____

DATE: _____ TITLE: _____

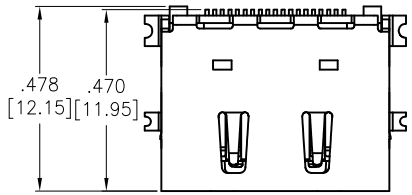

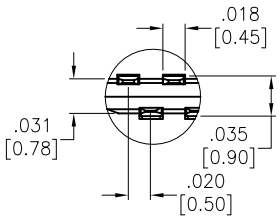

DETAIL A

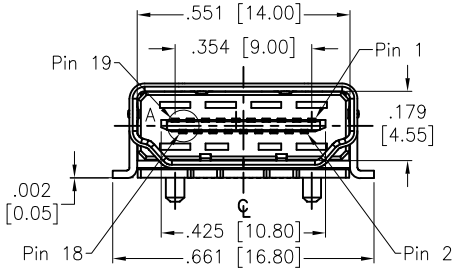

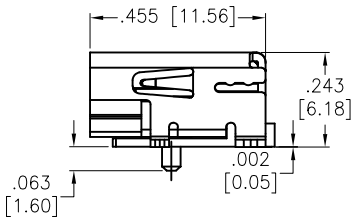

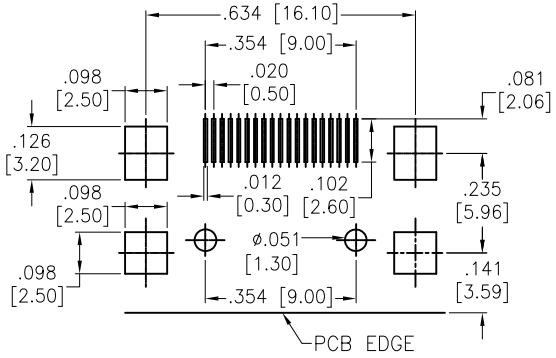

RECOMMENDED PCB LAYOUT

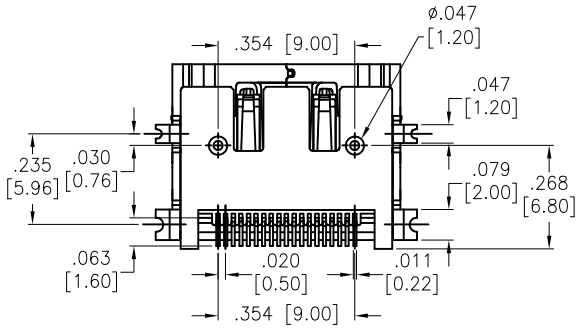

SPECIFICATIONS:
Material:
Insulator: Hi-Temp Thermoplastic, rated UL 94V-0
Insulator color: Black
Shield: Copper Alloy, Nickel Plated
Contacts: Copper Alloy
Plating:
Gold Flash over Nickel underplate on contact area,
Tin over Copper underplate on tails
Electrical:
Current rating: 0.5 Amps max.
Contact resistance: 10 mohms max.
Insulation resistance: 100 Mohms min.
Dielectric withstanding voltage: 300 VAC for 1 minute
Temperature Rating:
Operating temperature: -55°C to +85°C
Environmental:
Lead free, RoHS compliant.

RoHS COMPLIANT

UNLESS OTHERWISE SPECIFIED
ALL DIMENSIONS ARE INCHES [MM]
TOLERANCES: EXCEPT AS NOTED

INCHES		HOLES	
.X	± .10	Ø.X	±.10
.XX	± .020	Ø.XX	±.015
.XXX	± .015	Ø.XXX	±.010

APPROVALS		DATE
DRAWN	BW	10/09/06
CHECKED		
APPROVED		

ADAM TECH
909 Rahway Avenue, Union, NJ 07083
Phone: 908-687-5000 Fax: 908-687-5710

TITLE: HDMI CONNECTOR, RIGHT ANGLE, SURFACE MOUNT

SIZE	PART NO.	REV.
X	HDMI-S-RA-TSMT	A

REF: S00013T | SCALE: NTS | SHEET 1 OF 1