Rev	AWO #	Description	Date	Appr
-		RELEASED	8/17/09	

APPROVED: _____

DATE: _____ TITLE: _____

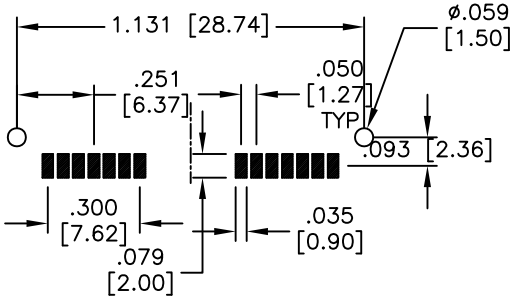

RECOMMENDED PCB LAYOUT
(TOP VIEW)

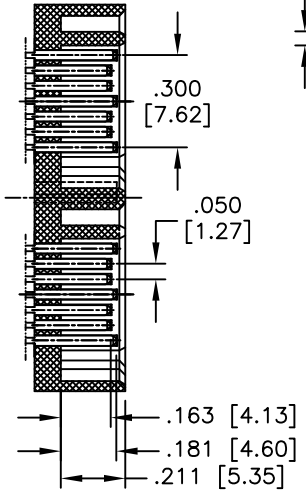

SECT A-A

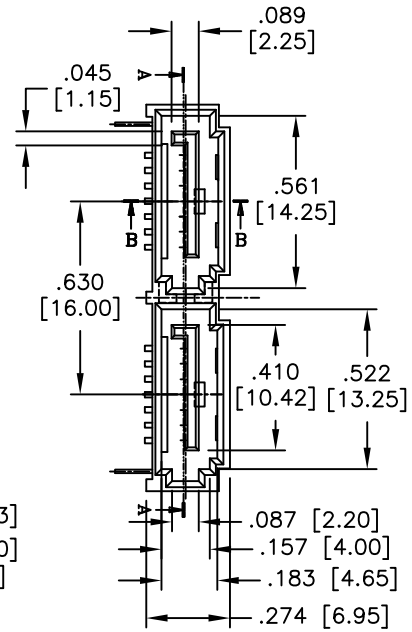

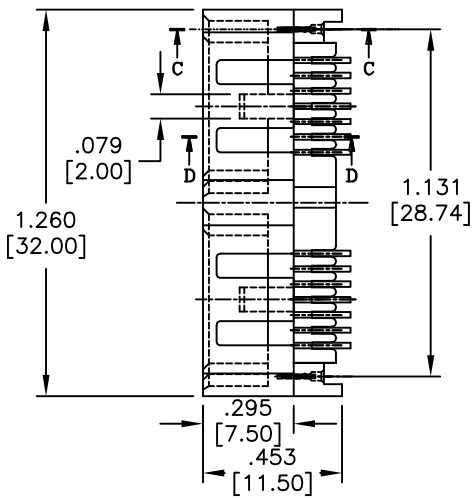

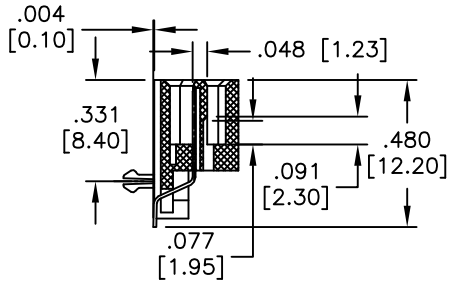

SECI B-B

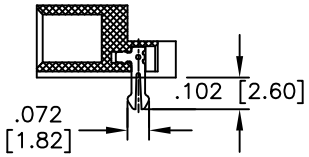

SECT C-C

SPECIFICATIONS:
Material:
Insulator: LCP, rated UL 94V-0
Insulator color: Black
Contacts: Brass
Plating:
Gold flash over Nickel underplate on mating area,
Tin over Copper underplate on tails
Electrical:
Operating voltage: 100 VAC max
Current rating: 1.5 Amps max
Contact resistance: 30 mohms max
Insulation resistance: 1,000 Mohms min @ 500 VAC
Dielectric withstanding voltage: 500 VAC for 1 minute
Temperature Rating:
Operating temperature: -55°C to +125°C
Environmental:
Lead free, RoHS compliant
Recommended soldering temp: 260°C for 5 seconds

RoHS COMPLIANT

UNLESS OTHERWISE SPECIFIED
ALL DIMENSIONS ARE INCHES [MM]
TOLERANCES: EXCEPT AS NOTED

INCHES		HOLES	
.X	± .10	Ø.X	±.10
.XX	± .020	Ø.XX	±.015
.XXX	± .015	Ø.XXX	±.010

APPROVALS		DATE
DRAWN	DY	8/17/09
CHECKED		
APPROVED		

ADAM TECH
909 Rahway Avenue, Union, NJ 07083
Phone: 908-687-5000 Fax: 908-687-5710

TITLE
SERIAL ATA CONNECTOR, TYPE E
RIGHT POLARIZATION, SMT TYPE, KEY

SIZE	PART NO.	REV.
X	SATA-E-PR-SMT-K	-

REF: S00078T | SCALE: NTS | SHEET 1 OF 1